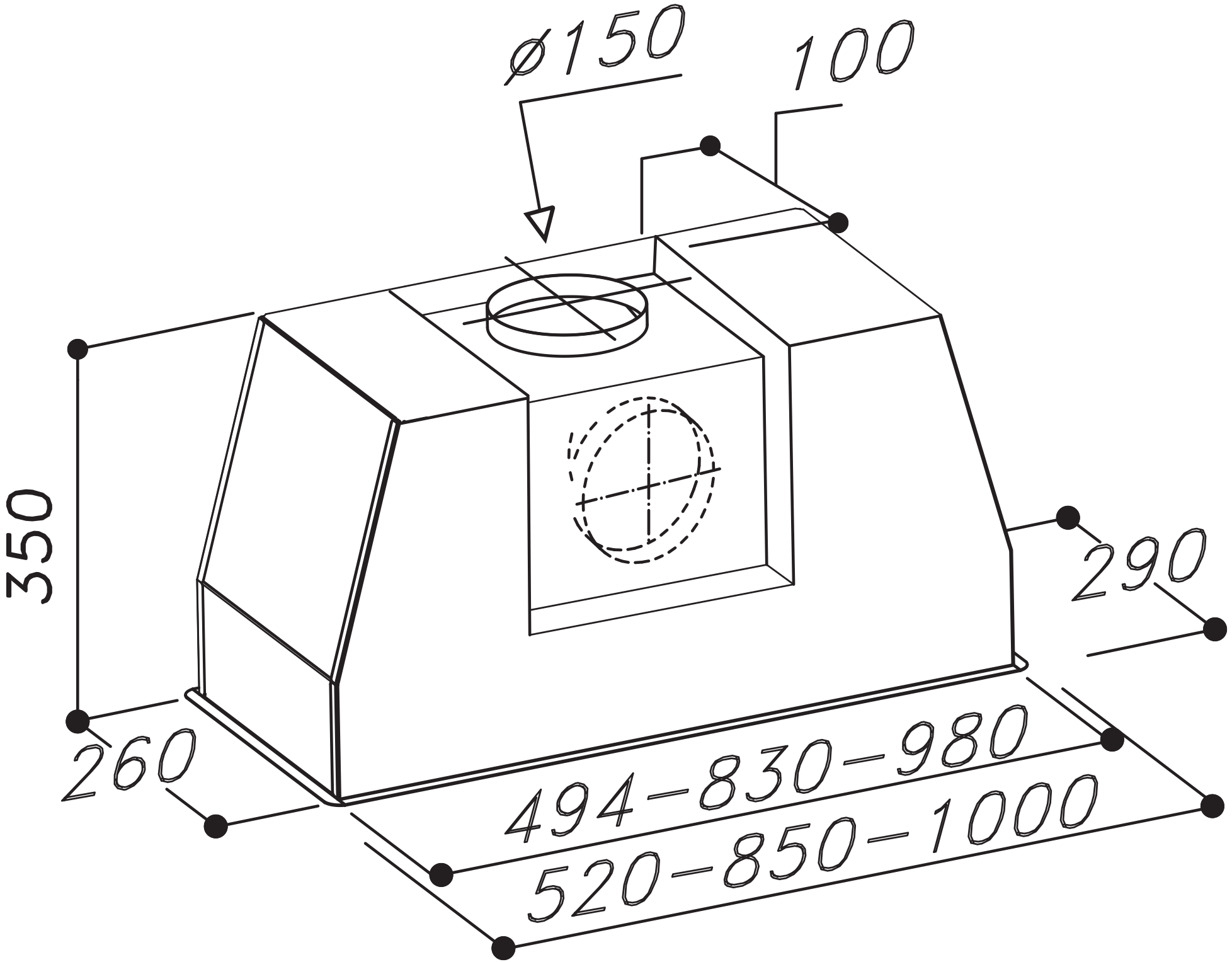
ø150
100
350
290
260
494–830–980
520–850–1000